Roos Instruments, Inc - Cassini

Block Diagram, RI8563C
40.5 GHz, 2-Port-1-Path TIM

2015-10-08

Copyright Roos Instruments, Inc.
Subject to change without notice

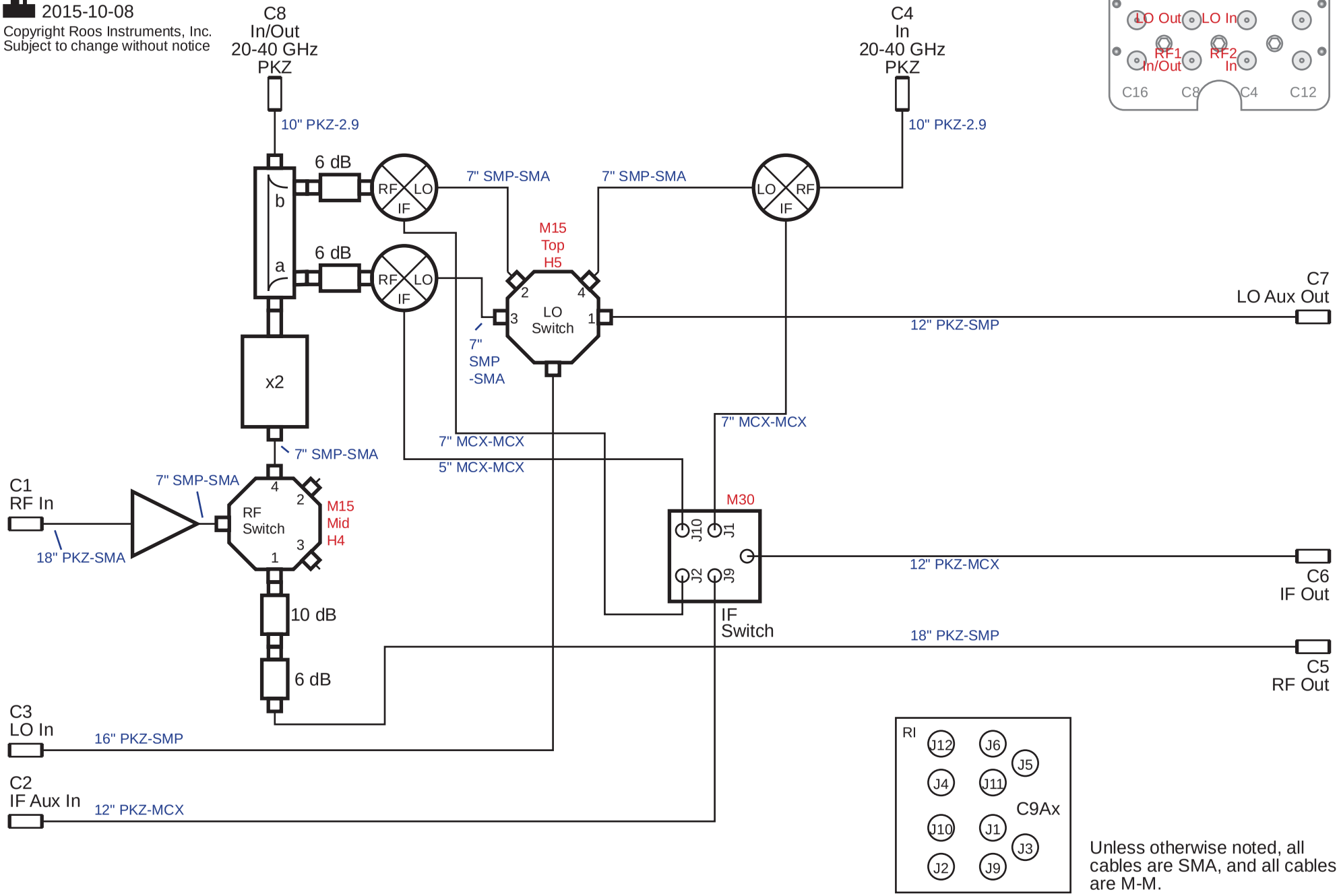

Unless otherwise noted, all cables are SMA, and all cables are M-M.