Roos Instruments, Inc - Cassini

Device Power
RI8546A/B/C

2011-01-21

Copyright Roos Instruments, Inc.
Subject to change without notice
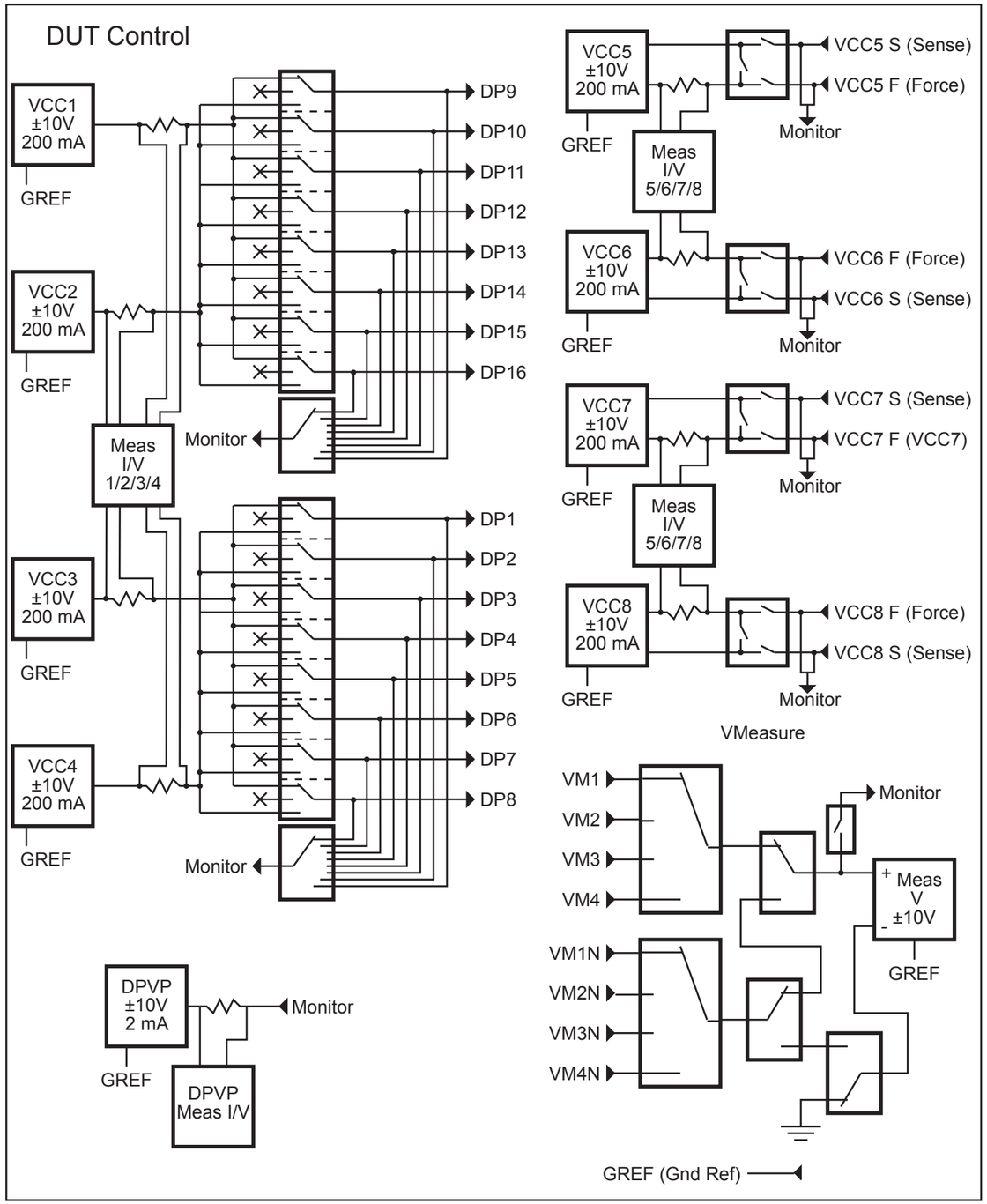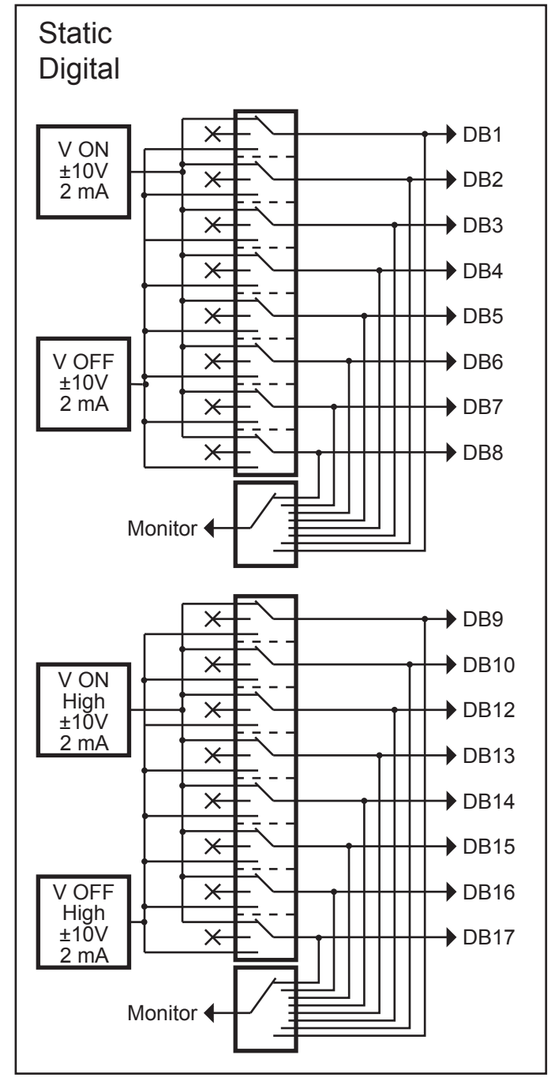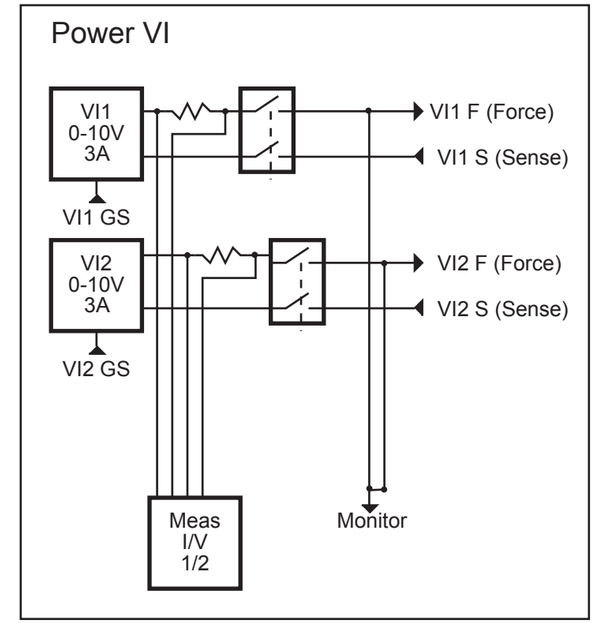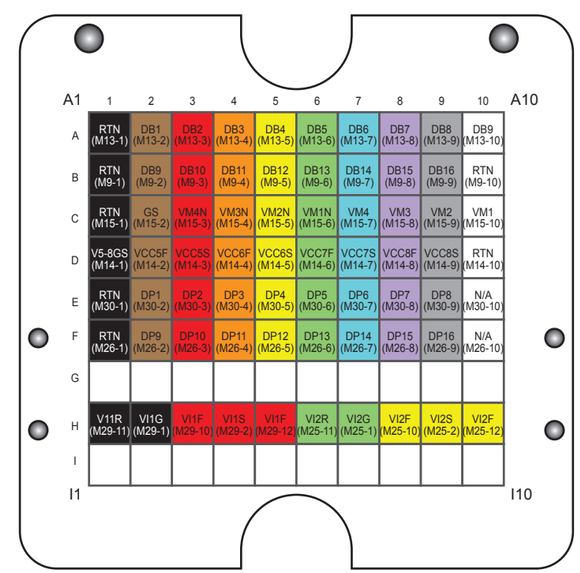
Notes:
1) GS are the ground references. They should be grounded at the DUT.
2) VI RTN are the high current return for VIs.
They should be grounded at the DUT with heavy wire.
4) Values are for reference only.
Refer to specifications for complete performance values.